SpeedBox 1.1 for Panasonic

STEP 1: Preparation for installation

For a brand new e-bike ride at least 10 km before installing and activating the tuning.
Warning: *We recommend having the installation carried out by a professional!*

A. Prepare the following tools (tools may vary depending on the type of e-bike):
1. Socket wrench 22 mm
2. Crank puller
3. Crank puller
4. Wire stripping pliers
5. Ratchet 1/2“
6. Hex key H8
7. Hex key H5
8. Hex key H2.5
9. Side-cutting pliers

B. Turn off the e-bike.
C. Remove the battery from the e-bike according to the manufacturer‘s manual.
D. Turn the e-bike upside down so the motor faces upward.

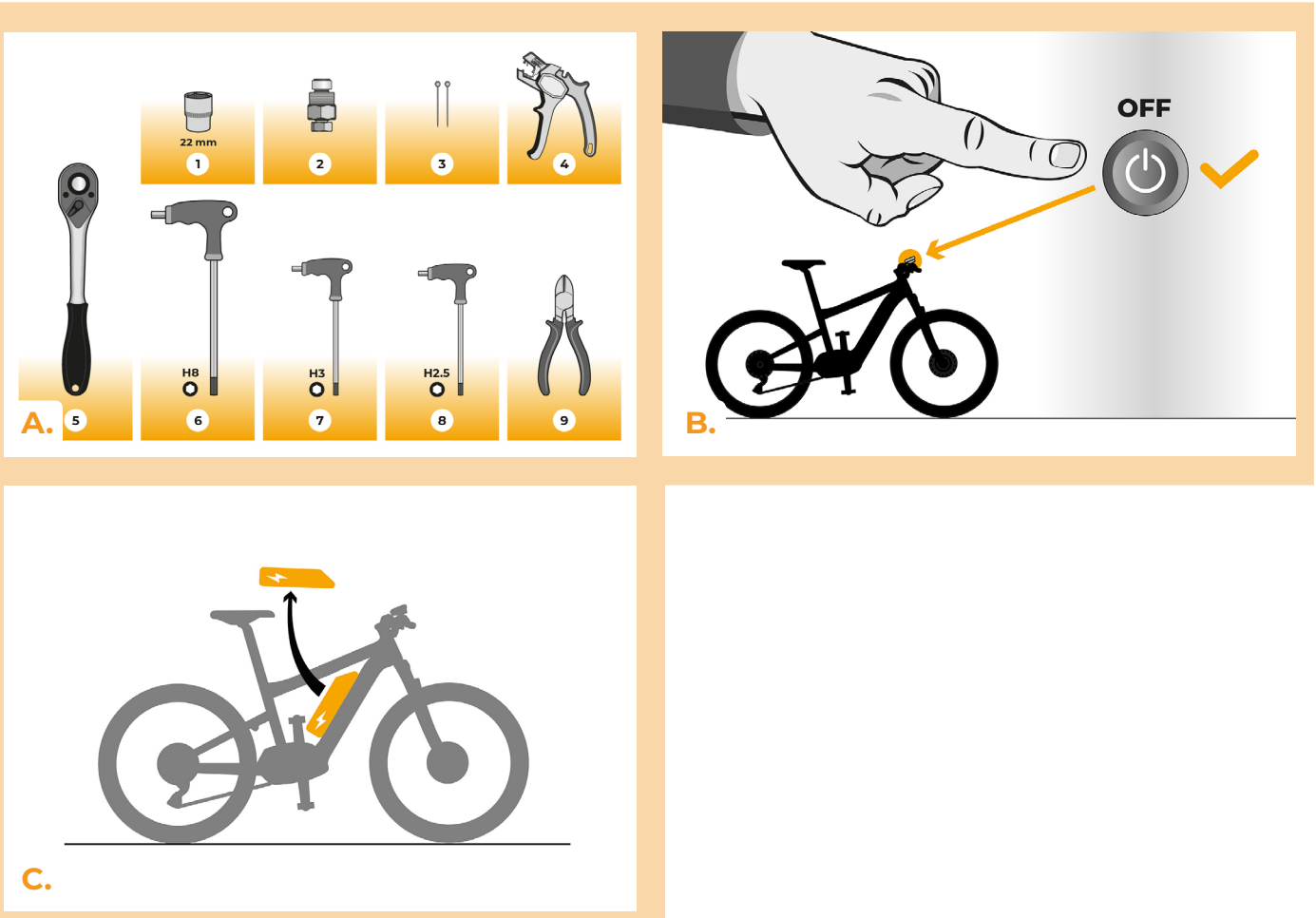

STEP 2: Removing the crank arm and motor cover of the e-bike

Motor cover disassembly may vary depending on the e-bike's design.

A. Remove the crank arm from the motor on the side opposite the chainring. Using an H8 Allen key, unscrew the crank arm fixing bolt.
B. Using a crank puller and ratchet, loosen the crank arm from the motor and remove it.
C. Using H2.5 and H3 Allen keys, unscrew the three bolts securing the motor cover on the side where you removed the crank arm.
D. Remove the motor cover.

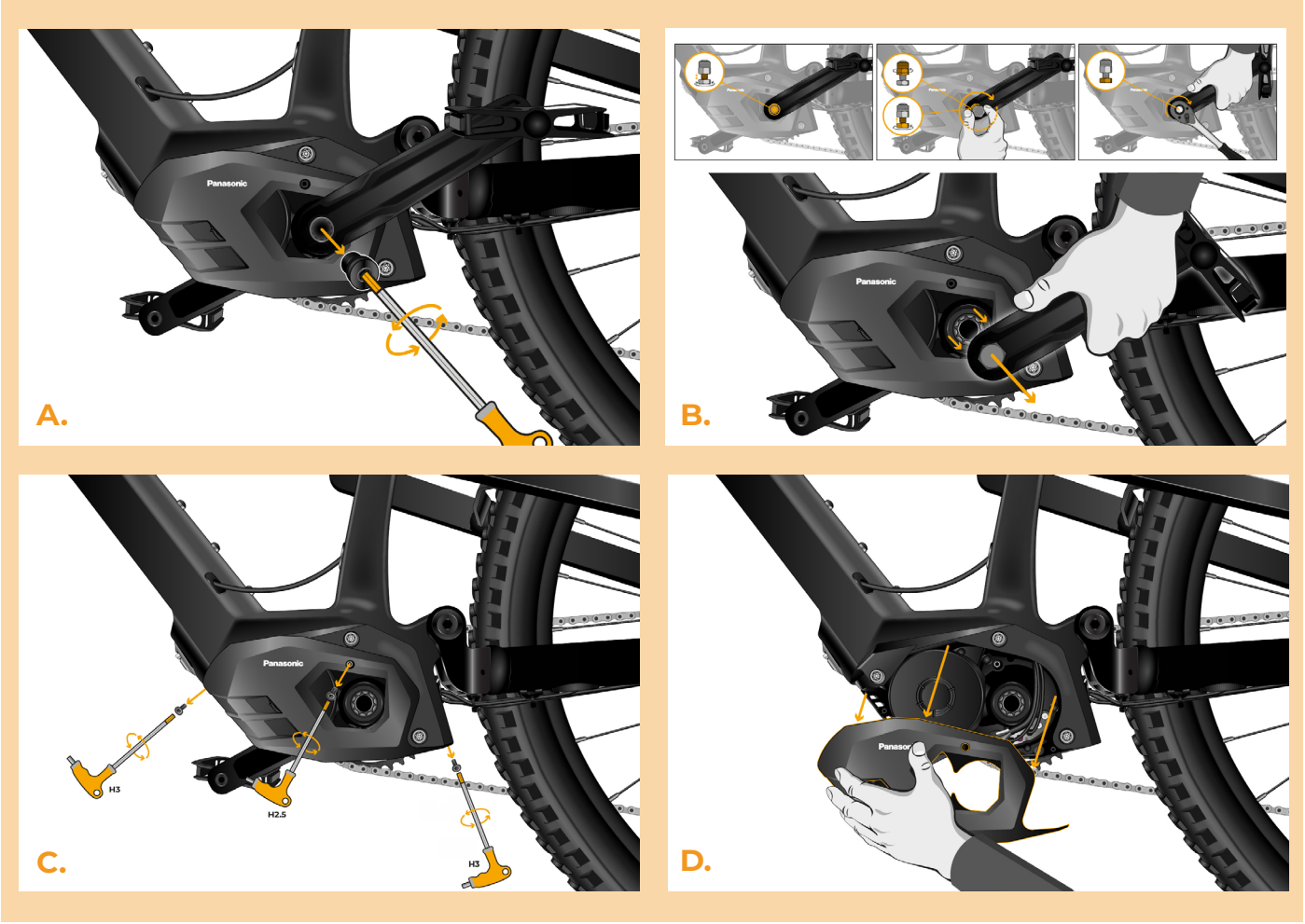

STEP 3: Motor connector disconnection

A. Disconnect the speed sensor connector.

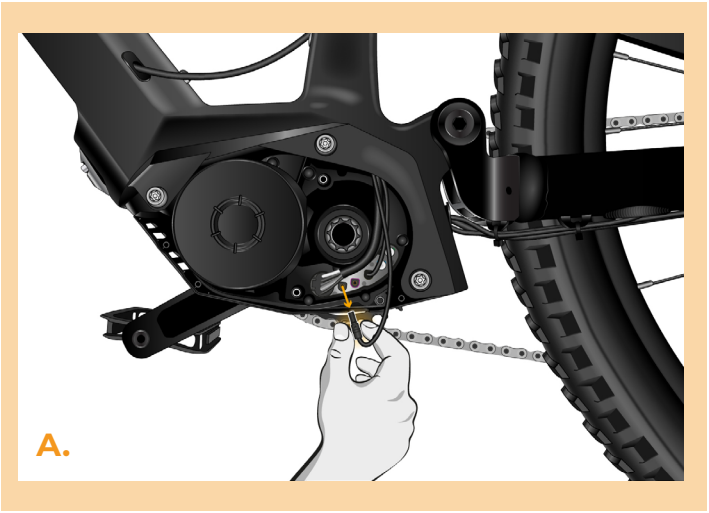

STEP 4: SpeedBox tuning installation

A. Cut the speed sensor connector using side-cutting pliers approximately halfway along the visible cable length from the connector.

B. Strip the first black outer layer of the cable and both wires (black and red) inside the cable using wire stripping pliers. Repeat the same procedure on both the connector side and the side of the cable leading from the motor.

C. Now prepare the SpeedBox and insert two pins into the rectangular openings. Insert the wires into the device according to the illustration and colour coding (red and black). Once the wires are inserted, remove the pins. This will secure the wires inside the device. Make sure the connections are correct: connect the wire leading to the rear wheel to the speed sensor symbol and connect the free connector to the motor symbol.

D. Now reconnect the originally disconnected connector to the motor together with the SpeedBox device.

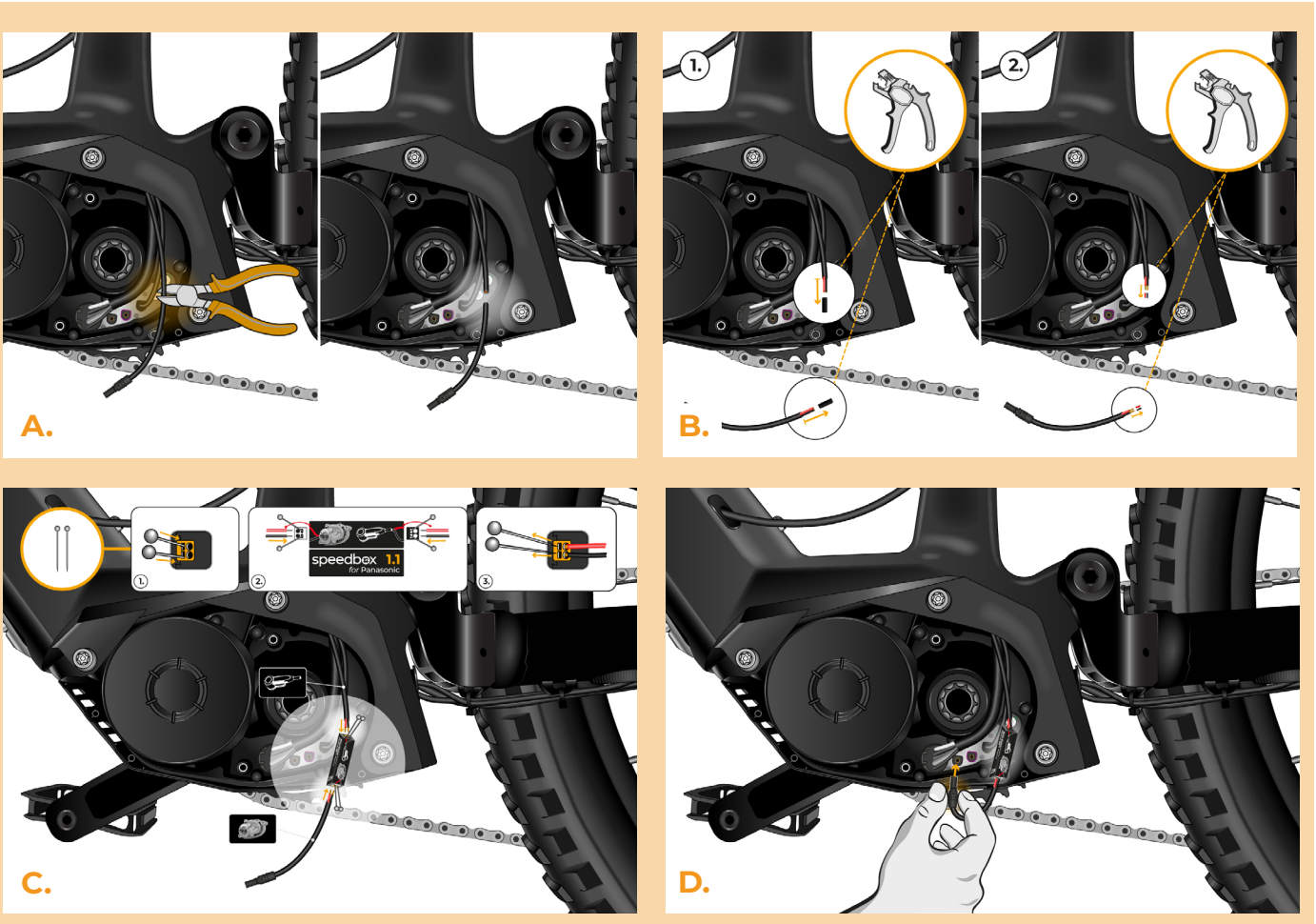

STEP 5: Reinstalling the motor cover and crank arm

A. Place the connected SpeedBox in the available space inside the motor.
B. Reinstall the motor cover.
C. Tighten all screws using H2.5 and H3 Allen keys.
D. Reinstall the crank arm onto the motor axle and tighten it securely. Secure it with the fixing bolt using an H8 Allen key.

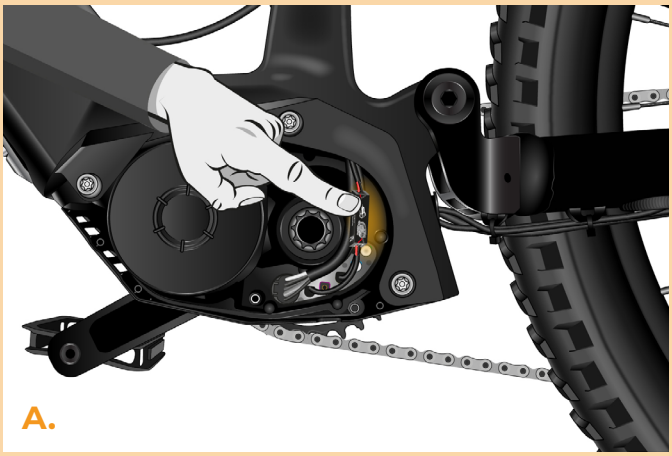

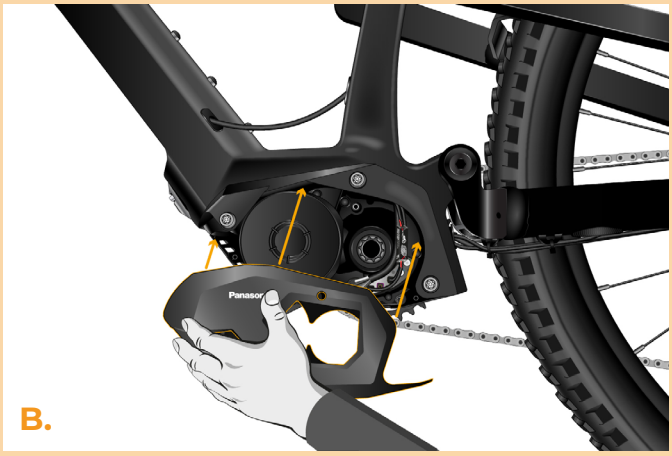

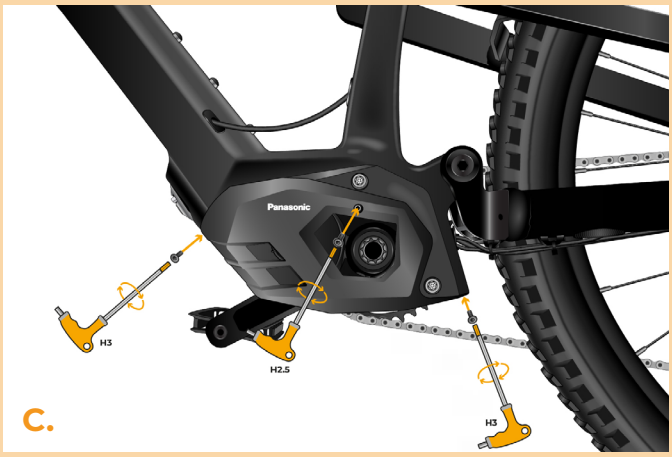



speedbox
break the limits

STEP 6: Tuning function check

A. Place the battery back into the e-bike.
B. Turn the e-bike on.
C. The SpeedBox device is permanently active when the e-bike is switched on, and the maximum speed is always set to 50 km/h. **Warning:** The speed displayed on the display is accurate only up to approximately 18 km/h.
D. Spin the rear wheel and check whether the speed is displayed on the display.

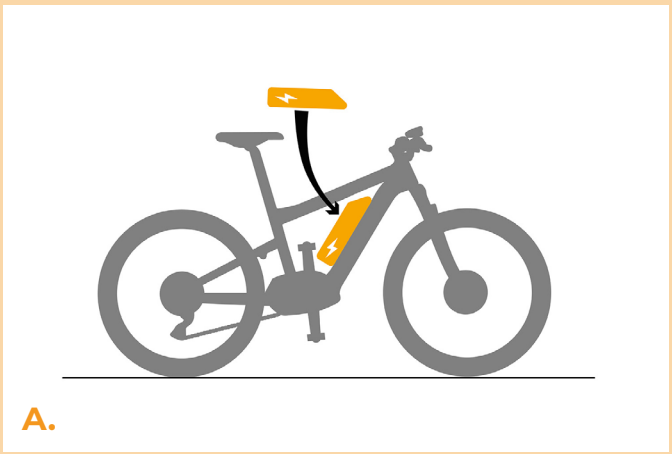

A.

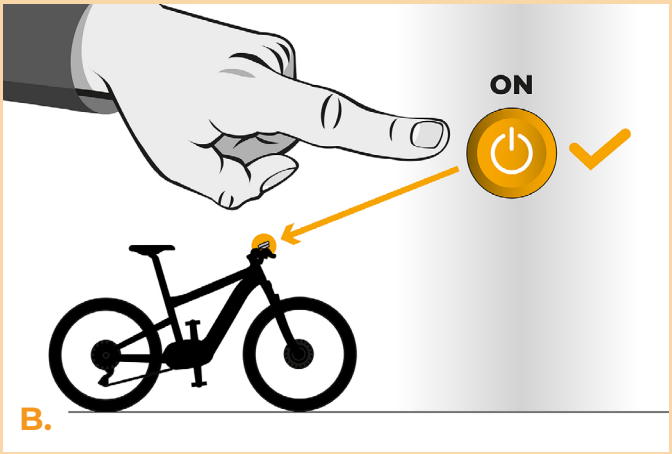

B.



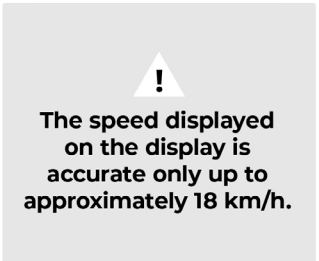

C.

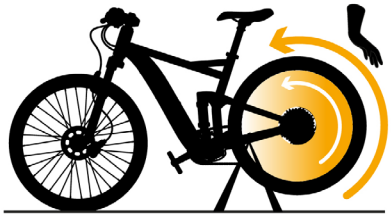



D.

speedbox
break the limits

www.speedbox-tuning.com

Ebike Electronic s.r.o.
Rybna 716/24 | 110 00 Praha 1 | Czech Republic | ID: 05553555 | VAT: CZ05553555